Sto Classic 375

Top View
Scale 1:40

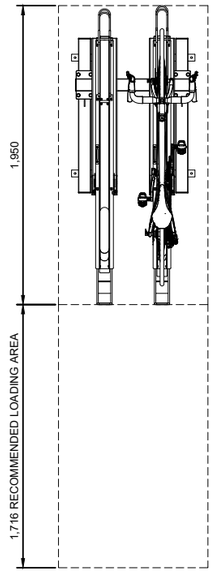

Perspective View
Not to Scale

Front View
Scale 1:40

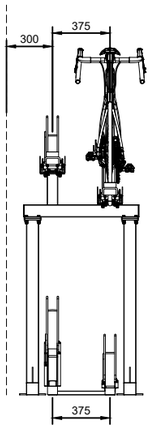

Right Side View
Scale 1:40

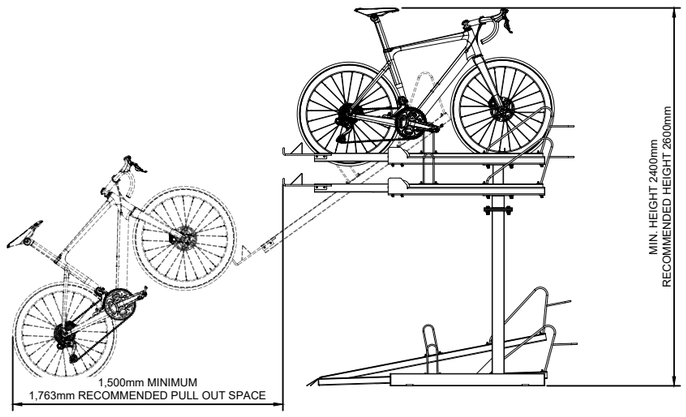

Technical **information**

Materials:	Stainless Steel & Mild Steel
Standard Finish:	Brushed stainless steel & powder coating to support legs, rails, handles, wheel stays and locking loop
Handle Options:	Powder coated in various colours
Configuration:	Single Sided
Bike Capacity:	Bespoke to customer specification
No. of Locking Points:	3 per space - front wheel, rear wheel and main frame
Fixing Options:	Surface Mounted
Optional Extras:	Location identifiers & signage Sold Secure Bronze SS104:2020 Security Rated.
BREEAM:	Our products will assist with achieving BREEAM rating
Product Warranty:	Two years
Minimum Clear Height:	2400mm
Recommended Clear Height:	2600mm

PRODUCT NAME:

Sto Classic 375

SCALE:	SHEET SIZE:	DRAWN BY:
1:40	A3	AA

CHECKED BY: JB	DATE: 10/04/2026

PRODUCT NO. : DDCL375SS

- All dimensions are in mm unless otherwise stated
- Any dimensions scaled from this drawing are taken at the reader's own risk

Bellsure
01730 719 292
info@bellsure.co.uk
bellsure.co.uk